EPC300W

Magnetic Non Dimmable

Outdoor Black Powder Coated Steel Enclosure

Multi Tap: **12VAC and 15VAC**

Total Wattage: **300W max**

Input Voltage: **120V 60Hz**

EMCOD Lighting Group

www.emcod.com

Conforms to UL STD. 1838
Certified to CSA
STD. C22.2 № 250.0, 250.7



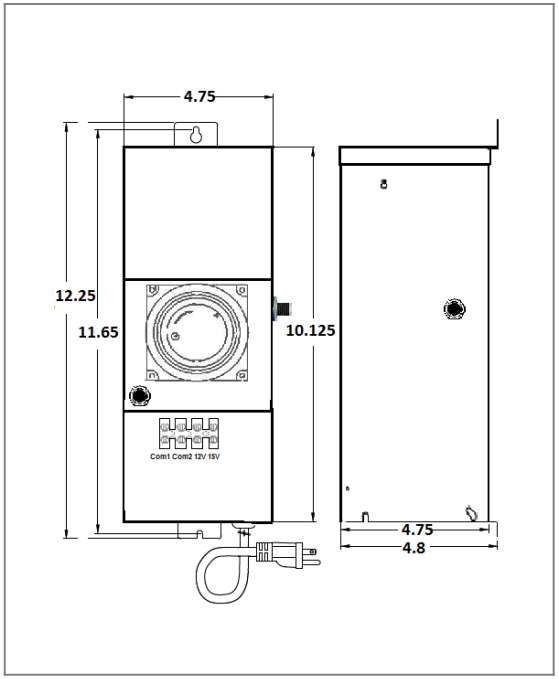

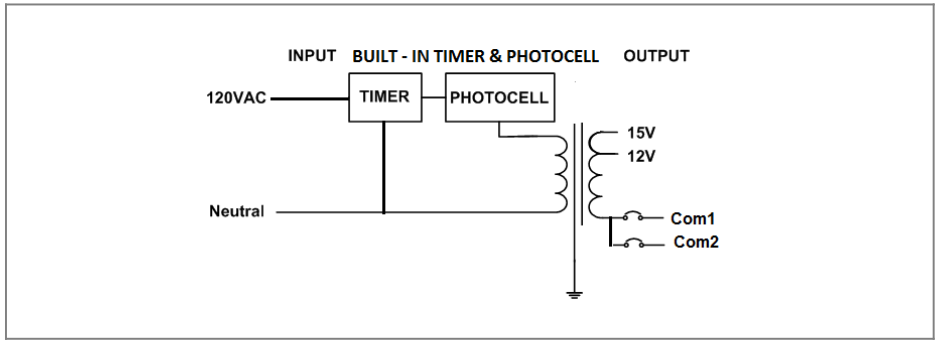

Transformer

Non Dimmable
Temperature class B(130°C)
Timer and photocell build in options

Housing

The actual transformer 300W is encapsulated in the enclosure
The enclosure is Black Powder Coated Steel, NEMA 3R rated
Wiring compartment has 2 knockouts sizes for 3/8 inch screw cable connectors
Enclosure Temperature does not exceed 65°C at 45°C ambient and fully loaded
Dimensions (inch): H = 12.25, W = 4.75, D = 4.8
Weight (LBs): 1.4

Electrical Parameters

Input Voltage:	**120V 60Hz**
Max. input current at full load:	**2.5A**
Output voltage without load:	**12/ 15VAC**
Output voltage fully loaded:	**11.5/ 14.5VAC**
Max. Total Wattage:	**300W**
Max. Output Current:	**25/ 20A**
Efficiency:	**90%**
Load regulation:	**0%**
Ripple:	**0%**

Mailing Address: 646 Flinn Ave. Unit B, Moorpark , CA 93021 Tech support: Arik Nirenberg phone: 818-904-3309
Fax: 818 904 3327 info@emcod.com techsupport@emcod.com