ML100S12AC

Magnetic Phase cut Dimmable LED AC Driver

Outdoor Black Powder Coated Steel Enclosure

Single Circuit: **12VAC**

Total Wattage: **100W max**

Input Voltage: **120V 60Hz**

www.emcod.com

Conforms to UL STD. 2108
Certified to CSA
STD. C22.2 № 250.0
model EM100
4008104
Link to certification



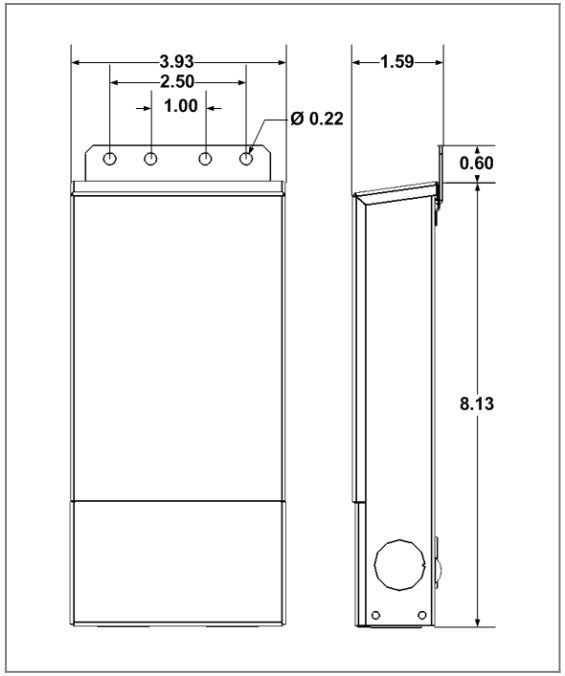

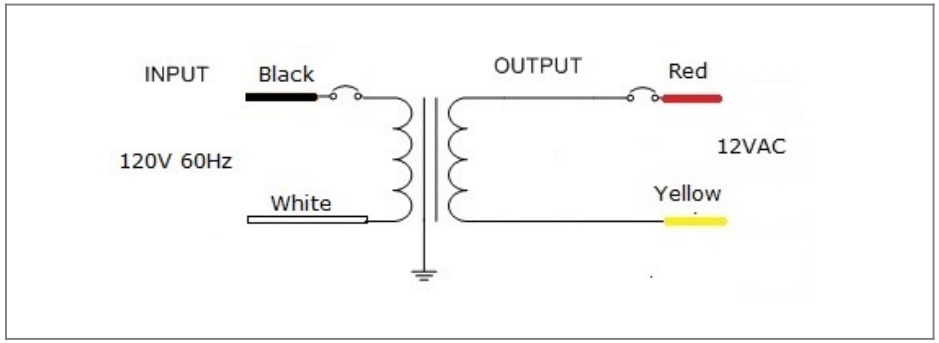

Transformer

Dimmable with compatible MLV, ELV, CL dimmers, please refer to list on emcod.com
Temperature class B(130°C)
Input leads are 18AWG 600V
Output leads are 18AWG 300V
Leads max. operational temperature is 105°C
Thermal manually reset primary breaker 2A
Thermal manually reset secondary breaker 13A

Housing

The actual transformer 100W is encapsulated in the enclosure
The enclosure is Black Powder Coated Steel, NEMA 3R rated
Wiring compartment has 5 knockouts sizes for 3/8 inch screw cable connectors
Enclosure Temperature does not exceed 75°C at 45°C ambient and fully loaded
Dimensions (inch): H = 8.13, W = 3.93, D = 1.59
Weight (LBs): 4.35

Electrical Parameters

Input Voltage:	**120V 60Hz**
Max. input current at full load:	**1A**
Output voltage without load:	**13.5VAC**
Output voltage fully loaded:	**11.5VAC**
Max. Total Wattage:	**100W**
Max. Output Current:	**8.3A**
Efficiency:	**85%**

Mailing Address: 646 Flinn Ave. Unit B, Moorpark , CA 93021 Tech support: Arik Nirenberg phone: 818-904-3309
Fax: 818 904 3327 info@emcod.com techsupport@emcod.com