ML50S12AC-PS

Class 2 Magnetic Phase cut Dimmable LED AC Driver

Outdoor Black Powder Coated Steel Enclosure
Single Circuit: **12VAC**
Total Wattage: **50W max**
Input Voltage: **120V 60Hz**

www.emcod.com

Compliant to UL 1563 Pool



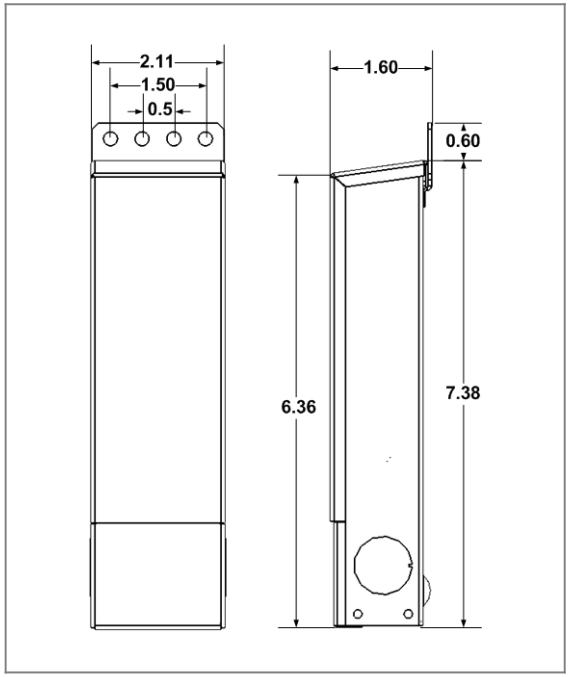

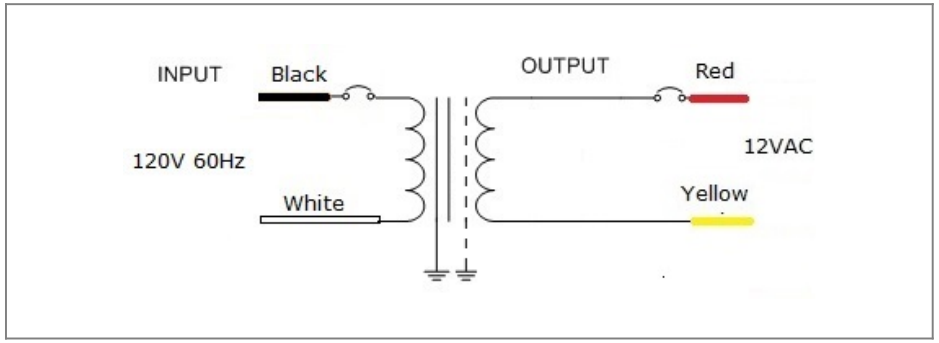

Transformer

Dimmable with compatible MLV, ELV, CL dimmers, please refer to list on emcod.com
Temperature class B(130°C)
Input leads are 18AWG 600V
Output leads are 18AWG 300V
Leads max. operational temperature is 105°C
Thermal self reset primary breaker 1.25A
Thermal self reset secondary breaker 5A

Housing

The actual transformer 50W is encapsulated in the enclosure
The enclosure is Black Powder Coated Steel, NEMA 3R rated
Wiring compartment has 2 knockouts sizes for 3/8 inch screw cable connectors
Enclosure Temperature does not exceed 75°C at 45°C ambient and fully loaded
Dimensions (inch): H = 7, W = 2.11, D = 1.54
Weight (LBs): 2.1

Electrical Parameters

Input Voltage:	**120V 60Hz**
Output voltage without load:	**13.2VAC**
Output voltage fully loaded:	**11.6VAC**
Max. Total Wattage:	**50W**
Max. Output Current:	**4.1A**
Efficiency:	**85%**

Mailing Address: 646 Flinn Ave. Unit B, Moorpark , CA 93021 Tech support: Arik Nirenberg phone: 818-904-3309
Fax: 818 904 3327 info@emcod.com techsupport@emcod.com