# EMT-900-SSH

**Magnetic Dimmable**

Outdoor Stainless Steel Enclosure

Multi Tap: **12-15VAC**

Total Wattage: **900W max**

Input Voltage: **120V 60Hz**

EMCOD
ElectroMagnetic Component Optimal Design

**www.emcod.com**

**Conforms to UL STD. 1838**
**Certified to CSA**
**STD. C22.2 № 250.0, 250.7**

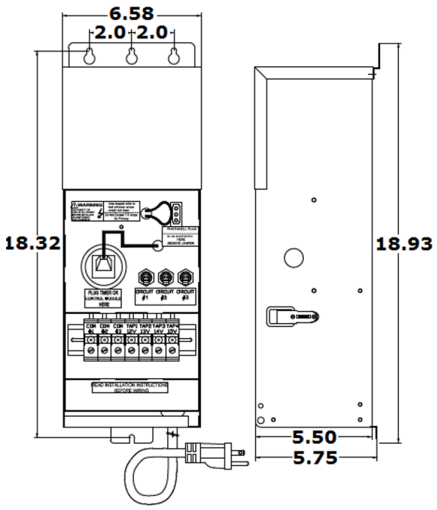


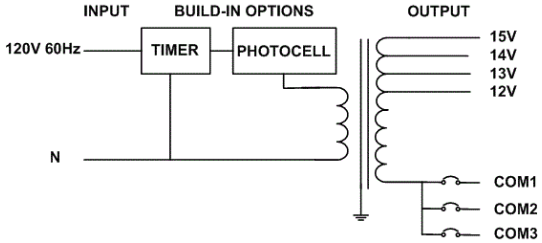


## Transformer

Dimmable with any LV magnetic dimmer as long as you cover dimmer's min load.
Temperature class B(130°C)
Input leads: Line cord
Output leads: Terminal Block
Magnetic manually reset secondary breaker 25A per circuit
Timer and photocell build in options

## Housing

The actual transformer 900W is encapsulated in the enclosure
The enclosure is Stainless Steel, NEMA 3R rated
Wiring compartment has 6 knockouts sizes for 3/8 inch screw cable connectors
Enclosure Temperature does not exceed 75°C at 45°C ambient and fully loaded
Dimensions (inch): H = 18.93, W = 6.58, D = 5.75
Weight (LBs): 35

## Electrical Parameters

| | | |
|---|---|---|
| Input Voltage: | **120V 60Hz** | |
| Max. input current at full load: | **7.5A** | |
| Output voltage without load: | **12/ 13.4/ 14.2/ 15.3VAC** | |
| Output voltage fully loaded: | **11.4/ 12.6/ 13.6/ 14.6VAC** | |
| Max. Total Wattage: | **900W** | Max. per circuit: **300W** |
| Max. Output Current: | **25/ 23/ 21/ 20A** per circuit. | |
| Efficiency: | **94%** | |
| Load regulation: | **0.04%** | |

**Mailing Address: 15545 Cabrito Rd. Van Nuys, CA 91406 Tech support: Arik Nirenberg phone: 818-904-3309 cellphone: 818-269-4091**
**Fax: 818 904 3327 info@emcod.com techsupport@emcod.com**